Journal of Arid Environments (1998) **39**: 57–78
Article No. ae980377

Soil-induced variability in root systems of creosotebush (*Larrea tridentata*) and tarbush (*Flourensia cernua*)

L. H. Gile*, R. P. Gibbens† & J. M. Lenz†

**Soil Survey Investigations, USDA-NRCS, Las Cruces, New Mexico, U.S.A.*
†Jornada Experimental Range, USDA-ARS, Las Cruces, New Mexico, U.S.A.

(*Received 5 January 1998, accepted 26 January 1998*)

Creosotebush (*Larrea tridentata*) and tarbush (*Flourensia cernua*) are two of the major shrub invaders of grassland in many desert areas of southern New Mexico. Soils and root systems associated with these two shrubs were studied at three sites on an alluvial fan piedmont. The soils have formed in alluvium derived from monzonite, rhyolite, and andesite, in deposits ranging in age from late Holocene to middle Pleistocene. Soil age, carbonate morphology, particle size, and landscape position were found to be major factors associated with root variability. The stage I carbonate that occurs in youngest soils has relatively little influence on root distribution because the carbonate consists only of thin coatings on sand grains and pebbles. But the increasing carbonate that occurs in stages II, III, and IV results in denser zones of carbonate that control the routes for movement of both soil water and roots. Not only do individual nodules and cemented pebbly zones grow and eventually merge, they also represent zones of restricted hydraulic conductivity, funneling soil water and roots to as yet uncemented parts of the horizon. Continued carbonate accumulation leads to a plugged horizon and an overlying stage IV laminar horizon that is a barrier to roots. Particle size controls the time and amount of carbonate required for formation of these horizons. Calciargids of late Pleistocene age that averaged 4% and 32% by volume of gravel and contained 415 and 317 kg m^{-2} of pedogenic carbonate had only stage III horizons. In contrast, a Petrocalcid of the same age and averaging 63% by volume of gravel required only 205 kg m^{-2} of carbonate to form the stage IV horizon. Roots penetrated occasional openings in the stage IV horizon. Runoff from soils sloping 2% reduces the number of days with available soil water at various depths as compared to 1% slopes below. At the 2% slope, roots did not extend below 2 m depth, whereas at the 1% slope roots extended to as much as 5 m depth.

Keywords: stages I–IV of carbonate accumulation; hydraulic conductivity; calcic horizons; petrocalcic horizons; Calciargids; Petrocalcids; root morphology; root depth; root distribution

‡Present address: 2600 Desert Drive, Las Cruces, New Mexico 88001, U.S.A.

0140–1963/98/010057 + 22 $25.00/0

Introduction

Creosotebush (*Larrea tridentata*) and tarbush (*Flourensia cernua*) are two of the major shrub invaders of grassland in desert areas of southern New Mexico since about AD 1850 (Gardner, 1951; Buffington & Herbel, 1965; York & Dick-Peddie, 1969). Hallmark & Allen (1975) studied creosotebush in west Texas and eastern New Mexico. They found that the most important soil properties affecting the distribution of creosotebush to be gravel content and depth to free $CaCO_3$; soils that support creosotebush were found to be generally calcareous throughout and many of the soils had significant amounts of gravel. Tatarko (1980) studied the effect of $CaCO_3$ on the distribution of creosotebush, and generally agreed with the findings of Hallmark & Allen. These studies did not include work on creosotebush roots. With the exception of the present study and two previous ones (Gile *et al.*, 1995, 1997), few studies have related plant roots in arid lands to soil morphology, genesis and classification.

Soils can have a large influence on the rooting habit of plant species, particularly in arid areas, as has been shown in the Sonoran Desert (Cannon, 1911) and the Negev Desert (Evenari *et al.*, 1971; Herwitz & Olsvig-Whittaker, 1989). Rundel & Nobel (1991), in their discussion of structure and function in desert root systems, point out that the soils of desert regions are often an unfavorable environment for root growth, yet deserts support a surprising biomass and diversity of plant species. They hypothesized that the inhomogeneity of limited water resources in desert soils allows such a diversity of growth forms to exist. Although shallow root systems are characteristic of some desert species, deserts and temperate coniferous forests have the deepest rooting profiles of the terrestrial biomes, with only 50% of the roots in the uppermost 30 cm (Jackson *et al.*, 1996). With the anthropomorphic-induced increases in CO_2, it is hard to overemphasize the importance of a knowledge of root systems in relation to soils, because below-ground carbon storage is more than twice above-ground storage (Schlesinger, 1991); in some non-forest ecosystems, annual below-ground plant production may constitute 60 to 80% of total net primary production (Caldwell & Richards, 1986).

The objectives of this study were to illustrate some of the soils in which roots of creosotebush and tarbush occur; to characterize the root systems of these shrubs; to relate root morphology and distribution to soil characteristics; and to present the genetic background leading to pedogenic control on the disposition of creosotebush and tarbush roots.

Materials and methods

The three study sites selected for these studies are in the Jornada Experimental Range, in the Basin and Range province of southern New Mexico (Fig. 1). The sites occur on an alluvial fan piedmont (commonly abbreviated to fan piedmont) just above a basin floor (Fig. 2). The soils have formed in alluvium derived from monzonite, rhyolite, and andesite in the Dona Ana Mountains just upslope to the west (Figs 1 and 2). Table 1 summarizes the stages of carbonate accumulation and geomorphic surfaces on the fan piedmont. Precipitation at the Range Headquarters (Fig. 1) averages 247 mm annually, and about half of this occurs between 1 July and 30 September. Summers are hot; the mean temperature for July, the hottest month, is 26°C. January, the coldest month, has a mean temperature of 6°C.

Soil classification follows the Soil Survey Staff (1996) (Table 2). Stages of carbonate accumulation follow Gile *et al.* (1966). Laboratory analyses were done by the National Soil Survey Laboratory in Lincoln, NE.

The soil parent materials contain little or no carbonate, and all or nearly all of the pedogenic carbonate must have been derived from atmospheric additions (Gile *et al.*, 1981). The total amount of pedogenic carbonate in a soil is useful for estimating its age (Gile *et al.*, 1981; Machette, 1985; Mayer *et al.*, 1988; Marion, 1989), and for studying the effects of differences in carbonate content on soil morphology. The formula for determining the total carbonate in a soil is shown in Table 2.

Root excavations were made by using a backhoe to dig an access trench about 1 m from the bases of the target plants. At sites A and B (Fig. 1) a modified John Bean sprayer with two spray wands that could be adjusted from a fine, gentle spray to a solid stream of water was used to expose roots. Ice picks were used to facilitate exposure of roots in compacted layers. At site C the high gravel content rendered water sprays inefficient and roots were exposed using paint brushes and icepicks. Chisels and punches were used to trace roots into petrocalcic horizons. Roots were traced from origin to end so that there would be no question as to root identity.

To facilitate mapping of root systems a base line was established with a tightly stretched cord running through the base of the target plant and parallel to the access trench. All co-ordinate measurements (x, y, and z) were made from this base line. After exposure, roots were usually mapped at a scale of 10 cm = 1 inch on 17 × 22 inch sheets of graph paper which had 10 divisions per inch. Either a vertical or horizontal (sometimes both) projection was mapped with the appropriate z co-ordinate so that

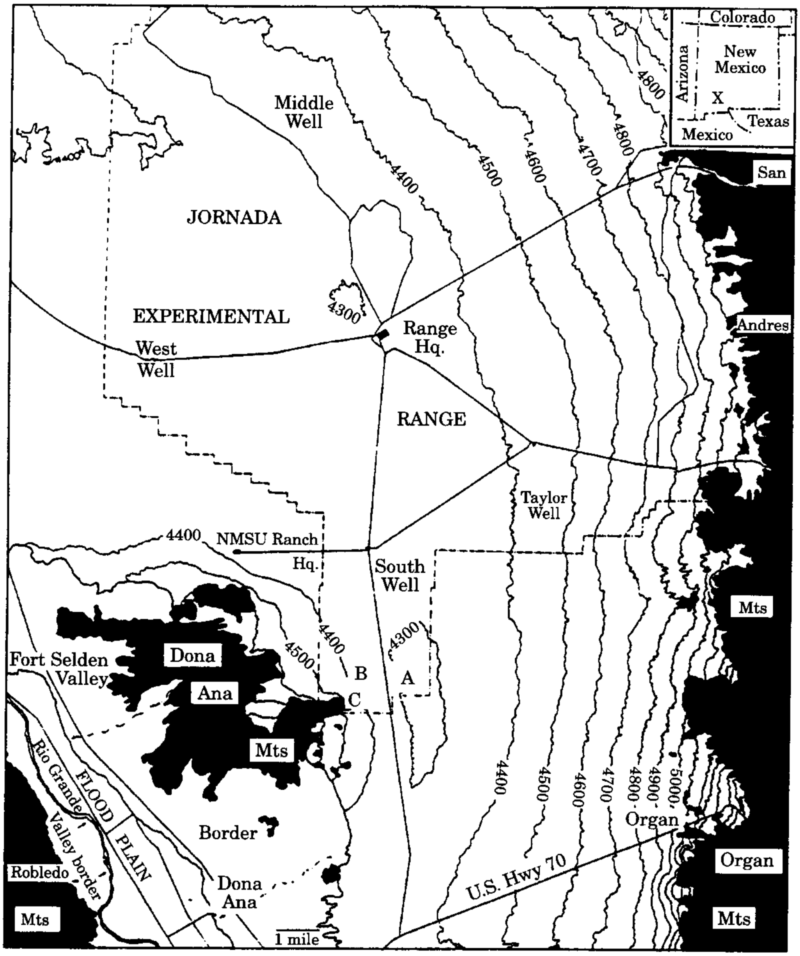

Figure 1. Location of study areas A, B, and C in the Jornada Experimental Range, southern New Mexico. The Rio Grande Valley is at lower left. Location in New Mexico is shown in the upper right inset. Contour intervals are in feet.

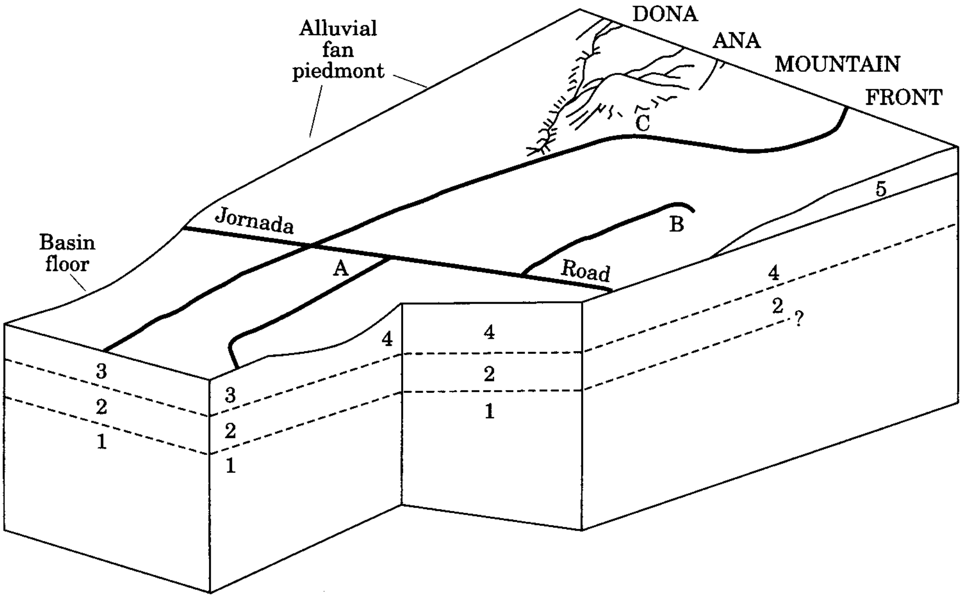

Figure 2. Diagram locating the soil–root study areas A, B, and C on the alluvial fan piedmont. General stratigraphy: 1 = fluvial facies of the Camp Rice Formation (deposits of the ancestral Rio Grande); 2 = Jornada I alluvium; 3 = Petts Tank sediments of the basin floor; 4 = Jornada II alluvium (alluvial fan piedmont analog of the basin floor Petts Tank sediments); 5 = Organ and Isaacks' Ranch alluvium (modified from Figure 225 in Herbel *et al.* (1994)).

Table 1. *Stages of carbonate accumulation and geomorphic surfaces for soils of the fan piedmont*

Stage			
Non-gravelly soils	Gravelly soils	Geomorphic surface	Soil age (years B.P. or epoch)
		Arroyo channels	Historical (since AD 1850)
I	I	Organ	100 to 7000
		III	100(?) to 1000
		II	1100 to 2100
		I	2200 to 7000
II	II	Isaacks' Ranch	Earliest Holocene–latest Pleistocene (8000–15,000)
III	III, IV	Jornada II	Late Pleistocene (25,000–150,000)
III	IV	Jornada I	Late middle Pleistocene (250,000–400,000)

Morphologies are best expressed where 'non-gravelly' soils contain less than about 20% by volume of gravel, and 'gravelly' soils contain more than about 60% by volume of gravel. Soils that have between 20% and 60% by volume of gravel have intermediate morphologies. Geomorphic surfaces after Ruhe (1967), Hawley & Kottlowski (1969) and Gile *et al.* (1981). Member alluviums of several different ages are included in Jornada II alluvium. Their estimated range in age is 25,000–150,000 years B.P. Carbonate morphology and totals of pedogenic carbonate indicate that the Jornada II alluvium in this report would represent the oldest in this range, or about 100,000–150,000 years B.P.

Table 2. *Soil characteristics at sites A–C (cont.)*

				Particle-size distribution (mm)												
				Sand fractions					Sand	Silt	Clay					
Horizon	Depth (cm)	Dry color	Texture	2–1	1–0·5	0·5–0·25	0·25–0·1	0·1–0·05	2–0·05	0·05–0·002	< 0·002	Organic C	$CaCO_3$ equiv. <2 mm	Pedogenic $CaCO_3$ (kg m^{-2})	Estimated bulk density (g cm^{-3})	>2 mm (vol.) (%)
									(%)							
Typic Calciargid (Dona Ana) at site A																
A	0–5	6YR 5·5/3	fsl	1	4	12	28	21	66	21	13	0·85	2	0·7	1·4	
BA	5–12	6 YR 5·5/3	vfsl		1	5	25	27	58	29	13	0·81	2	1·0	1·4	
Bt1	12–20	6YR 5/3	scl	3	8	13	23	14	60	20	20	0·42	1		1·4	3
Bt2	20–35	6YR 5/3	scl	5	7	9	20	13	53	18	29	0·43	2	2·1	1·5	5
Bt3	35–47	5YR 5/4	scl	4	6	7	20	13	49	22	29	0·37	4	5·0	1·5	8
Btk1	47–62	5YR 5/4	cl	4	4	6	17	13	43	24	33	0·30	4	6·6	1·5	3
Btk2	62–74	5YR 5/4	cl	2	4	5	13	15	38	26	36	0·24	5	7·2	1·5	
K2	74–90	7·5YR 9/3	c		1	2	10	14	27	32	41	0·28	38	96·7	1·7	4
K3	90–105	7·5YR 7/4	cl	1	1	3	14	19	39	34	28	0·13	32	70·7	1·6	5
Bk1	105–130	7·5YR 7/3	vfsl	1	1	3	20	28	53	25	15	0·08	20	64·1	1·5	10
Bk2	130–157	7·5YR 7/3	vfsl	1	2	4	19	28	53	28	15	0·07	16	60·8	1·5	
Bk3	157–178	7·5YR 7/3	vfsl	1	2	4	22	28	57	28	15	0·05	13	36·7	1·5	3
Bk4	178–194	7·5YR 7/3	vfsl	1	1	3	20	28	52	31	17	0·05	14	31·2	1·5	
Bk5	194–207	7·5YR 7/3	l	1	2	3	14	20	40	37	23	0·05	17	31·9	1·5	4
Btb	207–225	4YR 5/4	c	1	2	4	11	12	29	24	47	0·07	8	16·5	1·6	2
K1b	225–240	7·5YR 9/3	c	2	2	4	11	10	28	26	46	0·10	38	80·8	1·6	9
K2b	240–260	7·5YR 9/4	c	1	2	3	9	8	24	35	41	0·13	61	204·0	1·7	
														716·0 total for pedon, 414·7 for Jornada II, 301·30 for Jornada I		

Table 2. *Continued*

Horizon	Depth (cm)	Dry color	Texture	Particle-size distribution (mm)								Organic C	CaCO$_3$ equiv. <2 mm	Pedogenic CaCO$_3$ (kg m^{-2})	Estimated bulk density (g cm^{-3})	>2 mm (vol.) (%)
				Sand fractions					Sand	Silt	Clay					
				2–1	1–0·5	0·5–0·25	0·25–0·1	0·1–0·05	2–0·05	0·05–0·002	< 0·002					
				(%)												
Typic Calciargid (Tres Hermanos, overwash phase) at site B																
A	0–5	6YR 6/3	fsl	9	10	11	24	24	77	16	7	0·26	TR	0·6	1·4	10
Bk1	5–22	6YR 6/3	fsl	8	8	7	20	23	66	27	12	0·36	5	8·4	1·4	12
Bk2	22–35	7·5YR 6/3	fsl	14	7	8	21	20	69	18	13	0·39	7	5·5	1·4	50
Btkb	35–58	5YR 5·5/4	fsl	9	8	7	19	21	63	21	16	0·34	5	10·3	1·4	20
BAtkb2	58–75	5YR 5/4	scl	13	7	5	14	18	57	21	21	0·23	5	8·2	1·5	20
Btkb2	75–92	4YR 5/4	scl	7	7	6	14	20	53	22	25	0·24	7	12·7	1·5	17
K21b2	92–110	7·5YR 9/3	cl	8	5	4	9	11	36	33	32	0·23	46	97·2	1·6	25
K22b2	110–134	7·5YR 9/3	cl	13	6	4	8	10	41	31	29	0·18	41	92·2	1·6	40
K23b2	134–159	7·5YR 9/3	scl	16	8	5	12	12	54	25	22	0·12	28	66·2	1·6	55
K3b2	159–176	7·5YR 8/3	sl	15	11	9	14	12	60	22	18	0·10	26	32·1	1·5	55
Ck1b2	176–191	5YR 5/4	fsl	12	10	8	17	18	65	20	15	0·06	4	5·0	1·4	20
Ck2b2	191–207	5YR 5/4	sl	13	10	9	17	17	67	18	15	0·08	3	3·6	1·4	20
K1b3	207–219	7·5YR 8/4	scl	5	7	6	16	14	47	19	34	0·09	21	32·6	1·7	20
K2b3	219–240	7·5YR 9/2	scl	7	6	6	15	17	51	24	25	0·08	33	84·7	1·8	30
														459·30 total for pedon, 14·5 for Organ, 10·3 for Isaacks' Ranch, 317·2 for Jornada II, 117·3 for Jornada I		

Table 2. *Continued*

Horizon	Depth (cm)	Dry color	Texture	Particle-size distribution (mm)												
				Sand fractions					Sand	Silt	Clay					
				2–1	1–0·5	0·5–0·25	0·25–0·1	0·1–0·05	2–0·05	0·05–0·002	< 0·002	Organic C	CaCO$_3$ equiv. <2 mm	Pedogenic CaCO$_3$ (kg m^{-2})	Estimated bulk density (g cm^{-3})	>2 mm (vol.) (%)
				(%)												
Typic Petrocalcid (Delnorte) at site C																
A	0–5	7·5YR 6/3	fsl	4	5	8	25	23	66	27	8	0·40	5	2·4	1·4	15
Bk	5–15	7·5YR 6/3	fsl	8	7	7	17	19	57	28	15	0·62	14	7·7	1·4	58
K1	15–30	7·5YR 6/3	fsl	10	7	6	15	16	53	30	17	0·79	20	15·0	1·5	65
K21m	30–34	7·5YR 9/2	sl	26	18	11	10	7	72	18	11	0·30	58	9·1	2·0	80
K22m	34–50	7·5YR 9/2	sl	20	14	10	12	10	66	22	12	0·24	57	42·6	1·9	75
K23m	50–63	7·5YR 9/2	sl	20	10	7	9	10	57	28	15	0·24	47	32·3	1·8	70
K31	63–79	7·5YR 8/2	sl	19	11	9	12	11	62	26	12	0·16	28	27·7	1·6	60
K32	79–96	7·5YR 8/2	sl	16	10	9	11	11	57	30	14	0·15	27	24·8	1·6	60
K33	96–120	7·5YR 8/2	sl	20	11	9	11	9	60	26	13	0·11	33	43·0	1·6	65
														204·6 total for pedon (Jornada II)		

Colors given are the dominant ones; smaller volumes of other colors are present in some horizons. Intermediate hue designations indicate the closest hue, e.g. 6YR indicates that the hue is between 7·5YR and 5YR, but closer to 5YR than 7·5YR. Abbreviations for texture follow the Soil Survey Staff (1951). Particle size on carbonate-containing basis by method 3A1; organic C by method 6A1c; CaCO$_3$ equivalent by method 6E1g (Soil Survey Investigatons Staff, 1996). Bulk density estimated from previous work (Gile & Grossman, 1979) using soil texture and consistence. TR=trace, either not measurable by quantitative procedure used or less than reportable amount. Particle-size data reported in tenths of per cent, rounded to whole numbers in this table. Values less than 0·5% are blank. The calculation for pedogenic carbonate is for a volume element 1 m in horizontal cross-section and of variable thickness, according to the formula:

$$\mathrm{CaCO_3}\ (\mathrm{kg\ m^{-2}}) = \frac{L \times Db \times \left(1 - \frac{>2\ \mathrm{mm\ vol.\ \%}}{100}\right) \times \mathrm{CaCO_3\%}}{10}$$

where L is the thickness of the horizon in cm, Db is the bulk density of the fine-earth fabric, $1 - \frac{>2\ \mathrm{mm\ vol.\ \%}}{100}$ is a correction for the volume occupied by the >2 mm material, and CaCO$_3$ is carbonate content of the horizon minus the carbonate content of the parent materials.

3-D drawings could be made. Root diameters were measured with a vernier scale (Site A) or digital caliper (Sites B and C).

Site A

The root study trench at site A (Figs 3 and 4) was filled before the soil studies and was later re-excavated. The exposed soil is very similar to the soil excavated for root studies except for a pipe on one end (Fig. 4).

Soils

Site A occurs on lower slopes of the fan piedmont, not far from the basin floor (Fig. 2). Slope is 1% to the east. The landscape appears quite stable, with no incised drainageways. On smooth slopes such as this, with little transverse relief, and soil textures relatively fine, during heavy rains much water moves across the land surface as virtually continuous sheets, termed overland flow (Gile *et al.*, 1981). Soil water data at several exclosures in the vicinity indicate substantial contributions to soil water from runoff (Herbel *et al.*, 1994).

Soil of Jornada II age (100,000–150,000 years B.P.). The sampled pedon (Figs 3 and 4; Table 2) contains a thick soil in Jornada II alluvium and three underlying horizons in Jornada I alluvium. The soil in Jornada II alluvium is in the Dona Ana series, and is a Typic Calciargid, fine-loamy, mixed, superactive, thermic. The soil has an A horizon, an argillic horizon, and a stage III calcic horizon. Most horizons have

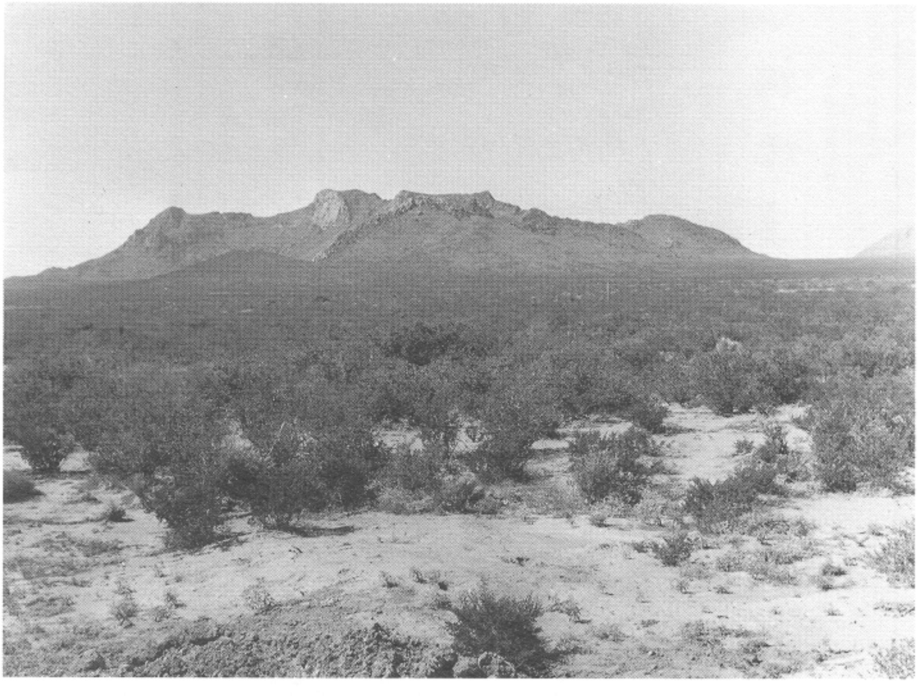

Figure 3. Landscape and vegetation of the Dona Ana soil, a Typic Calciargid in Jornada II alluvium at site A. Most of the shrubs are creosotebush and tarbush. The small creosotebush at lower center marks the study trench, which cannot be seen due to spoil from the trench at the bottom of the photograph. The Dona Ana Mountains are on the skyline.

prismatic structure. As for a Reagan soil discussed previously (Gile *et al.*, 1995), cracks between such prisms are routes for deep penetration of soil water.

The lower part of the Jornada II soil has a zone with mostly very fine sandy loam texture, with fairly high amounts of very fine sand and silt (Table 2). This zone occurs in the same stratigraphic position — the lower part of Jornada II alluvium — as a distinctive sediment termed the Petts Tank silt zone near the basin floor (Gile *et al.*, 1981, p. 185). Deposition in a lake rather than by streams was suggested as one possible explanation of the finer material. An alternative interpretation here is that this zone may represent deposition from erosion of upper horizons of the Jornada I soil, which would have been at the land surface upslope when accumulation of Jornada II alluvium began.

The soil in Jornada II alluvium has 415 kg m^{-2} of pedogenic carbonate (Table 2). Additions of carbonate in runoff waters may have contributed to this total.

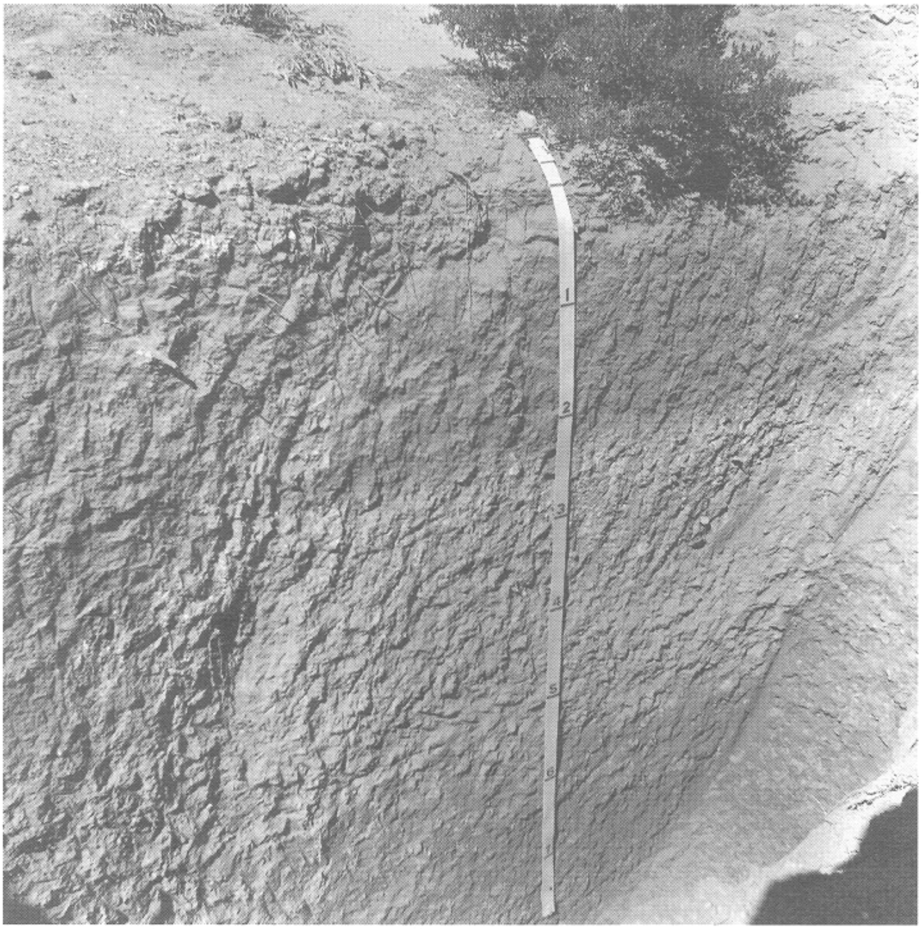

Figure 4. The Dona Ana soil in Jornada II alluvium at site A. The top of the stage III calcic horizon is at about $2\frac{1}{2}$ ft (0·8 m) depth. The linear diagonal indentation at left contains some spoil and marks the location of a narrow trench dug in tracing roots. At the left of the diagonal zone is a pipe that extends to the left edge of the photograph. The top of buried Jornada I alluvium and its soil are at about $6\frac{1}{2}$ ft (2·0 m) depth. The Dona Ana soil was sampled at the tape. Scale is in feet.

Soil of Jornada I age (250,000–400,000 years B.P.). The soil has the typical Bt horizon and underlying stage III carbonate for these soils with little gravel. The total of pedogenic carbonate for the sampled horizons is 301 kg m^{-2} (Table 2). The total of 61% carbonate for the K2b horizon is the highest obtained for any sample of the three pedons (Table 2).

Roots

Roots of two adjacent creosotebush plants were excavated at site A (Fig. 5). Although not shown in Fig. 5, there was a soil pedestal about 4 cm in height and 30 cm in diameter under each plant, indicating that overland flows had removed some soil since the shrubs became established. The plant on the left in Fig. 5 was 0·9 m tall and 1·4 m in diameter with a root crown 12 cm in diameter which tapered to 6 cm diameter at 10 cm depth and segmented into a large number of roots at that depth. The plant on the right in Fig. 5 was 1·2 m tall and 1·6 m in diameter. It had a root crown 6 cm in diameter with several large roots originating form the crown before it terminated at 20 cm depth. On both plants, major first order roots ranged up to 15 mm in diameter. Roots of both plants penetrated the calcic horizons and a root of one plant was traced to a depth of 5 m (Fig. 5). Due to safety and logistic considerations no attempt was made to trace the root beyond 5 m but it was only 1 mm in diameter at that depth and probably did not extend much further. In addition to the deeply penetrating roots there were many horizontally spreading roots (Fig. 5). Two of these with beginning diameters of 8 and 10 mm were traced horizontally outward from the plant 4·2 and 4·5 m, respectively. Higher order branches from the horizontal roots with diameters of 1 to 5 mm permeated the upper 30 cm of soil. Some angled upward to within 8 cm of the soil surface. Roots of both plants were intermingled and roots of each were traced to the root crown area of the other (Fig. 5). The >4 m horizontal extension of creosotebush roots at Site A is equal to that found by Cannon (1911) on a bajada site

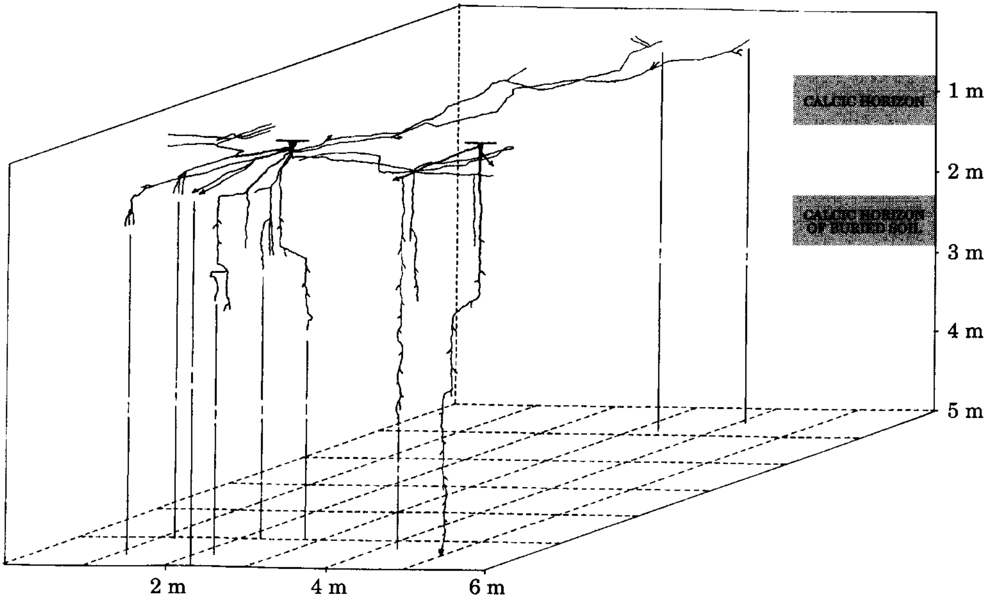

Figure 5. Roots of two creosotebush plants growing in the Typic Calciargid Dona Ana at site A. The soil surface is denoted by horizontal lines at the top of the root crowns. Roots ending in arrows were not followed further. Position of calcic horizons is shown on the back plane of the figure.

with a shallow soil and depth of penetration far exceeded the 2·1 m depth found by Cannon on the deep soils of a flood plain site.

A few roots of a tarbush plant 0·9 m tall and 1·2 m in diameter were excavated at site A (Fig. 6). Like the creosotebush plants, there was a soil pedestal about 4 cm tall beneath the plant crown. The tarbush taproot was 6 cm in diameter at 10 cm depth and 2 cm in diameter at 30 cm depth. Numerous branches originated from the tap root beginning at 5 cm depth. Roots were traced through the calcic horizons to a depth of 3·4 m. Above the upper calcic horizon horizontally extending roots were traced out 4·3 m from the plant base.

Site B

Because the root studies extensively disturbed adjacent soil horizons, an area a few meters to the west was selected for the soils studies. The soils, geomorphic surfaces and stratigraphy of the area selected are very similar to those at the root study area.

Soils

The general area in the vicinity of site B has scattered small drainageways and associated, thin stratified deposits that are clearly only a few years or decades old. The study trench at site B occurs in a relatively stable area between drainageways. Even so, this soil has probably undergone some erosion because drainageways are nearby, and at stablest sites a thin Bt horizon, commonly non-calcareous in part, is generally present. There is additional evidence of soil erosion in the last few decades. Vegetation records, including photographs taken in 1920, show that this general area was quite stable and dominated by black grama in 1920 (Buffington & Herbel, 1965). By 1963 the black grama had disappeared, and presently the area is dominated by shrubs such as creosotebush and tarbush. The change from grassy to mostly shrubby vegetation was apparently associated with development of the drainageways and erosion of the soils adjacent to the drainageways. Slope is 2% to the east.

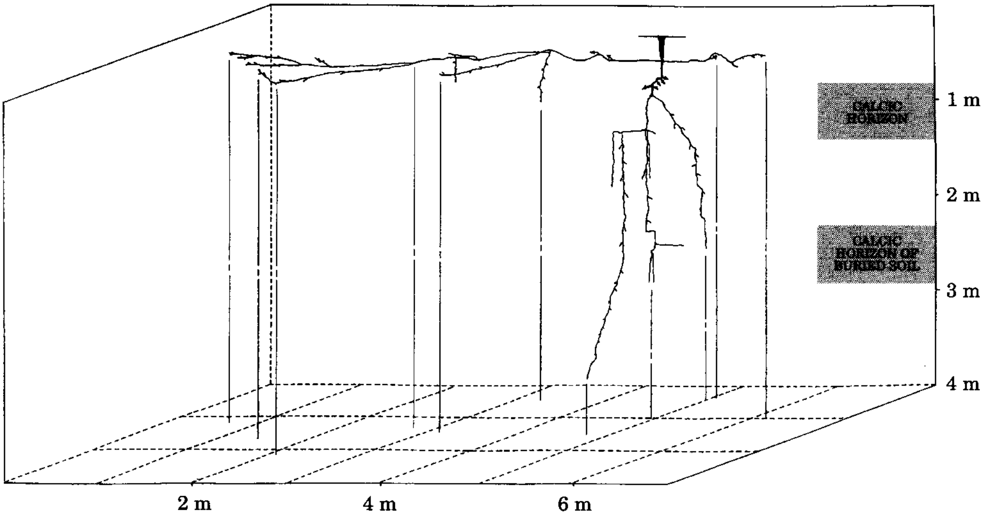

Figure 6. Roots of a tarbush plant growing in the Typic Calciargid Dona Ana at site A. The soil surface is denoted by a horizontal line at the top of the root crown. Roots ending in arrows were not followed further. Position of calcic horizons is shown on the back plane of the figure.

The erosion probably affected soil water and root development as well. Soil water studies nearby and in a soil similar to the one at site B showed that these soils have substantially fewer days with available water at various depths than stabler sites lower on the fan piedmont (Herbel *et al.*, 1994). This may be a reason for the relatively shallow roots, to be discussed later.

The sampled pedon at site B (Figs 1, 2, 7 and 8; Table 2) consists of a soil in a thin deposit of Organ age, an underlying, even thinner deposit of Isaacks' Ranch age, and buried soils in Jornada II and I alluviums (Table 2). Because the Dona Ana Mountains are a low range of mountains compared to the Organ and San Andres Mountains to the east, sediments associated with the four major geomorphic surfaces of the area (Table 1) tend to be relatively thin.

Soil of Organ age (100–7000 years B.P.). Soil at the land surface (Figs 7 and 8; Table 2) has formed in Organ alluvium. The base of the Organ deposit is well marked by a thin very gravelly zone (Fig. 8; Table 2). The soil has a thin A horizon and an underlying stage I Bk horizon in which thin carbonate coatings occur on sand grains and pebbles. Although the clay increase from A to B is enough for an argillic horizon (Table 2), the clay increase is not thought to be in silicate clay but mostly or wholly associated with carbonate accumulation because both clay and carbonate increase 5% (Table 2). Also, the Bk horizon lacks the distinctive fabric (termed Bt material; Gile *et*

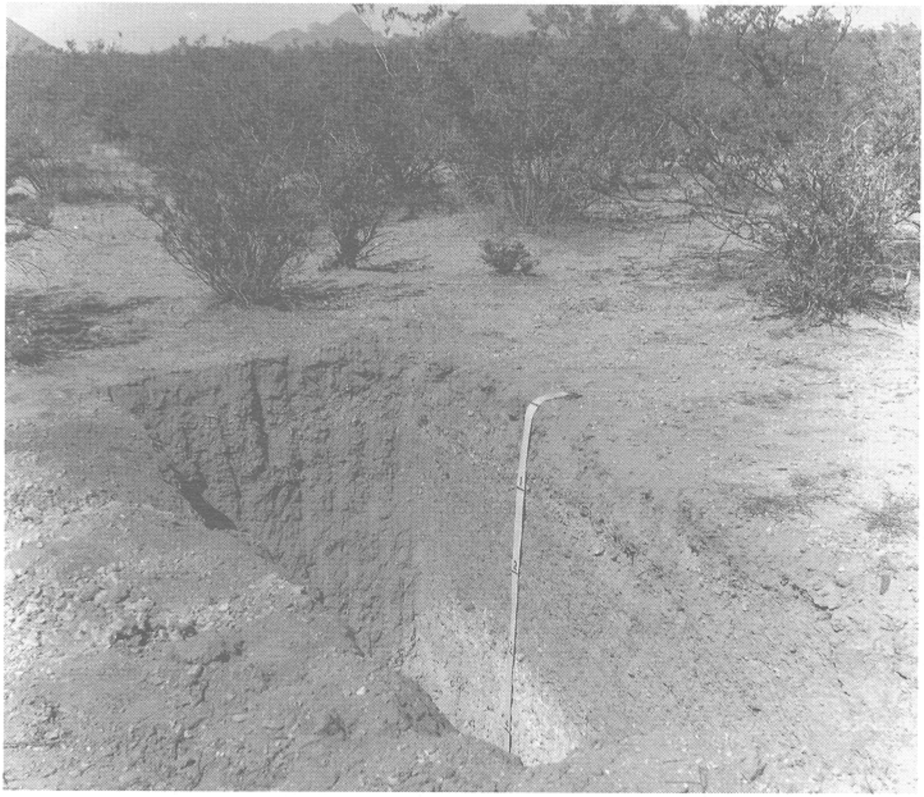

Figure 7. Landscape and vegetation of Tres Hermanos, overwash phase, a Typic Calciargid in Organ, Isaacks' Ranch, and Jornada II alluvium at site B. Most of the shrubs are creosotebush; a tarbush shrub is at right. Organ alluvium and its soil extend to just below 1 ft (0·3 m) depth where they are underlain by a thin deposit and Bt horizon of Isaacks' Ranch age. The top of the stage III calcic horizon in the buried Jornada II soil is at about 3 ft (0·9 m) depth. Part of a large pipe in the Jornada II soil may be seen at the left end of the trench. Scale is in feet.

al., 1981) of the argillic horizon in this area, in which sand grains are coated with oriented clay. The Btkb horizon in Isaacks' Ranch alluvium, however, does have Bt material. Because of this, the Btkb horizon is grouped with the underlying soil of Jornada II age for purposes of classification. Since the Organ deposit is less than 50 cm thick, the soil as a whole is classified as an overwash phase of Tres Hermanos, a Typic Calciargid, fine-loamy, mixed, superactive, thermic.

Although the thin stage I coatings on pebbles and sand grains have relatively little effect on the movement of soil water and root distribution, the total amount of carbonate is chronologically significant because total carbonate as well as the stage I morphology are typical of Holocene soils. The total amount of pedogenic carbonate in the three horizons of Organ age is 14·5 kg m^{-2} (Table 2). This amount falls within the range of Organ age from 8 to 20 kg m^{-2} indicated for other pedons of Organ age in the Desert Project (see Table 27 in Gile *et al.*, 1981). Because the Organ deposits are thin, however, some carbonate of Organ age likely contributed to carbonate in the underlying Isaacks' Ranch Btkb horizon (Table 2). Thus the total amount of carbonate associated with pedogenesis in Organ alluvium could be somewhat more than 20 kg m^{-2}. Because of these relatively high values, the Organ deposit is thought to be earliest Organ I alluvium (Table 1). This deposit probably dates from about 7000 years B.P. (Table 1), and could represent the first deposit emplaced after the climatic change

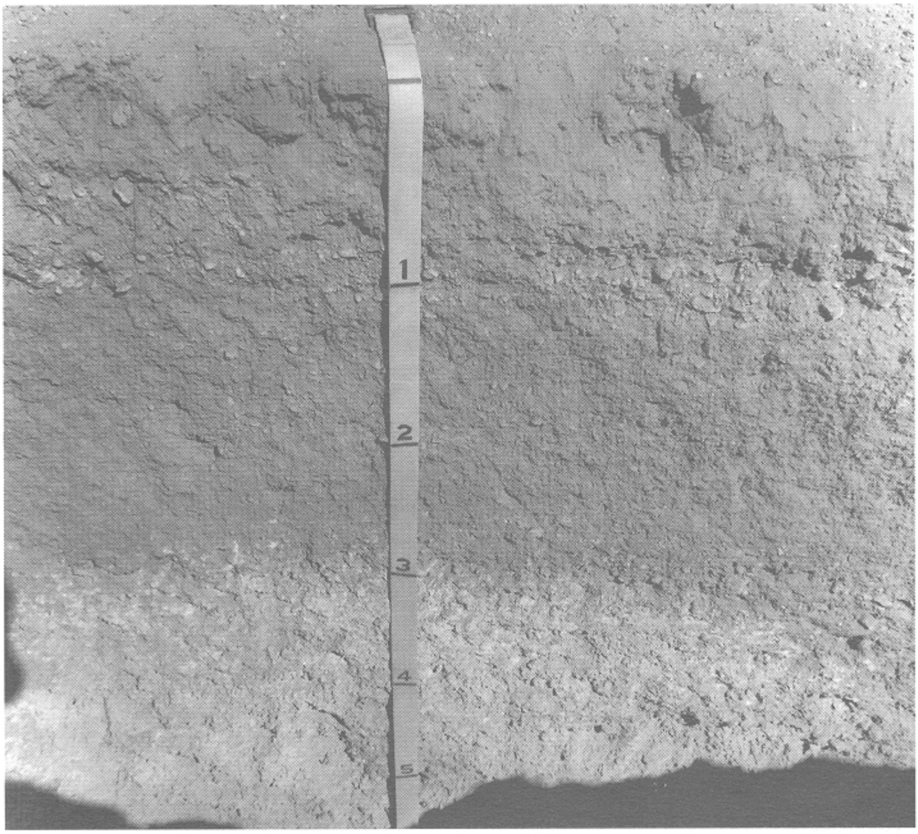

Figure 8. A closer view of Tres Hermanos, overwash phase at site B. Note that the stage III calcic horizon in Jornada II alluvium is visually more prominent than at site A (see text for discussion). The buried soil in Jornada I alluvium, not visible, is at a depth of nearly 7 ft (2·1 m). Scale is in feet.

from the last pluvial in the south-west (about 8000 years ago; Spaulding & Graumlich, 1986) to the drier climates of Antevs' Altithermal (Antevs, 1955).

Soil of Isaacks' Ranch age (8000–15,000 years B.P.). Deposits of Isaacks' Ranch age are commonly so thin below the Dona Ana Mountains that the stage II carbonate that is typical of Isaacks' Ranch soils has accumulated instead in the underlying Jornada II alluvium. The deposit is thick enough for formation of the Bt horizon that is typical of Isaacks' Ranch alluvium in these parent materials.

Soil of Jornada II age (100,000–150,000 years B.P.). This soil has a distinct Bt horizon and a stage III calcic horizon that is more visually prominent than the stage III horizon in Jornada II alluvium at site A, even though the latter has more pedogenic carbonate (415 kg m^{-2} *vs.* 317 kg m^{-2}; Table 2). The greater prominence at site B is attributed to the increase in gravel (32% at site B *vs.* 4% at site A) and higher percentages of the coarser sand fractions (Table 2). These larger particle sizes tend to decrease the total surface area and pore space, so that the accumulating carbonate is easier to see than when diffused throughout finer-textured material.

More carbonate would have accumulated in the Jornada II soil had it not been buried by younger deposits. If carbonate in the Organ and Isaacks' Ranch horizons is added to that presently in the buried Jornada II soil, the total would be 342 kg m^{-2}. This is substantially more than the range of 213–300 kg m^{-2} found in other Jornada II soils in the Desert Project (see Table 27 in Gile *et al.*, 1981).

Reddish hues in the C horizon (Table 2) suggest that the materials were derived in part from the Bt horizons of soils upslope.

Soil of Jornada I age (250,000–400,000 years B.P.). Only the two upper horizons were sampled from this soil. Presumably, the once-overlying A and B horizons were eroded prior to deposition of the overlying Jornada II alluvium and its soil. The sampled horizons contained 117 kg m^{-2} of pedogenic carbonate (Table 2).

Roots

Some roots of each of five neighboring creosotebush plants were excavated at site B (Fig. 9). Plant tops were similar to those portrayed in Fig. 7 and averaged 1·1 m in height and 1·1 m in diameter, with the number of stems being highly variable, ranging from 4 to 18. There were soil pedestals about 5 cm in height at the base of the plants.

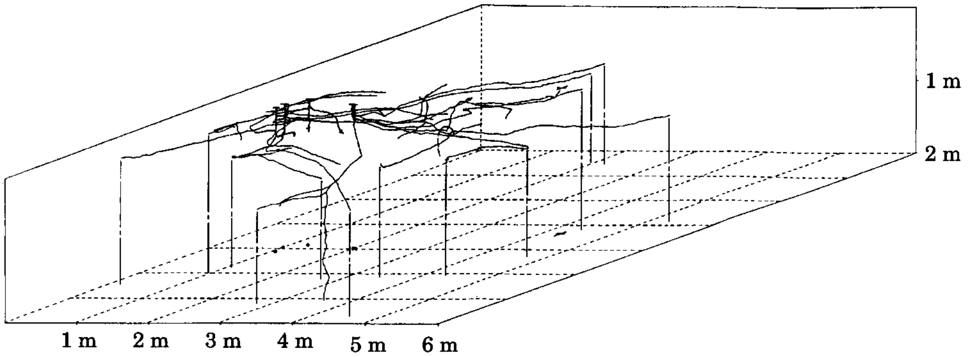

Figure 9. Roots of five creosotebush plants growing in the Typic Calciargid Tres Hermanos at site B. The horizontal line at the top of the root crowns denotes the soil surface. Solid dots on the base plane show position of root crowns. Roots ending in arrows were not followed further. The cross on the top and base plane show the position of another creosotebush plant whose roots were not excavated.

Root crowns ranged from 5 to 7 cm in diameter and tapered into short tap roots which extended to depths of 30–40 cm. The number of roots originating from each crown root and tap root was highly variable, ranging from 11 to 29. One plant had two roots arising from a branch base. Diameters of first order roots varied widely ranging from 0·4 to 17 mm, with an overall average diameter of 4·3 mm. Only 16 of the total of 93 first order roots are portrayed in Fig. 9.

Most of the creosotebush roots occurred in the upper 1 m of soil. Roots of the separate plants were highly intermingled and there was no evidence of inter- or intraspecific root avoidance. Roots were traced horizontally out to 3·6 m from the plant base. A few roots grew vertically or obliquely upward, some to within 5 cm of the soil surface. Only one root was traced to a depth of 2 m. Close examination of the walls of the 3 m deep access trench did not reveal any roots below 2 m depth. It is quite likely that rapid runoff on the relatively steep slope did not allow water to penetrate below 2 m depth even during large rainfall events.

Roots of a tarbush plant 1·2 m tall and 0·9 m in diameter were excavated at site B (Fig. 10). The top of the plant was somewhat decadent, with several dead branches, and major branches of the root system were also dead (Fig. 10). The diameter of the top of the tap root was 7 cm and the dark-colored first order roots had beginning diameters of 10 to 16 mm. The tarbush roots had a horizontal spread of about 2·5 m and extended into the matrix of creosotebush roots shown in Fig. 9. At a distance of about 50 cm from the root crown one of the major roots grew upward from 60 cm to 19 cm depth. Individual tarbush roots were not traced below 1 m depth although fragments of the dark-colored roots were observed between 1 and 2 m depths.

Site C

Soils

Site C occurs on steeper slopes than sites A and B and is closer to bedrock areas of the Dona Ana Mountains. Slope is 5% to the east. As at site B, drainageways are present and are associated with current erosion. Shallow drainageways near site C expose the

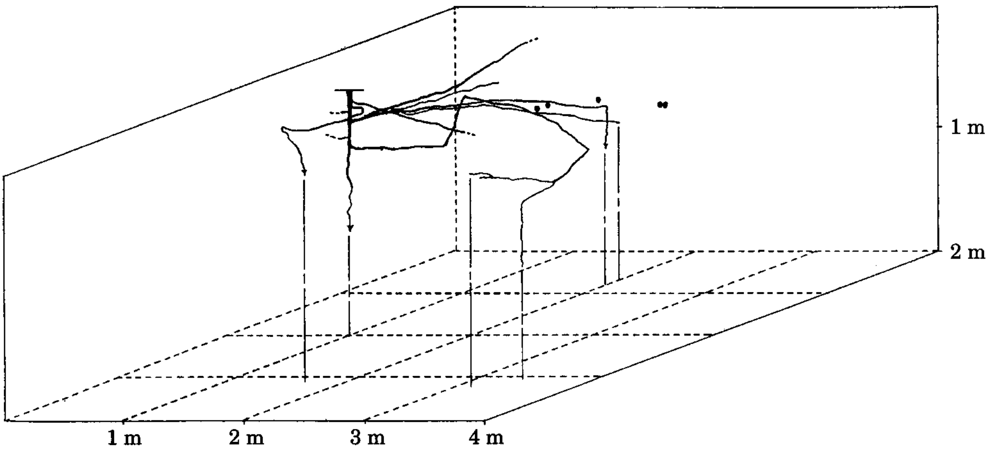

Figure 10. Roots of a tarbush plant growing in the Typic Calciargid Tres Hermanos at site B. The horizontal line at the top of the root crown denotes the soil surface. Roots ending in arrows were not followed further; roots ending in dashes were dead beyond that point. Dots on the top lane show the position of the crowns of creosotebush plants shown in Fig. 9.

petrocalcic horizon, and runoff from this area is clearly contributing calcareous surface water to the fan piedmont below.

Soil of Jornada II age (100,000–150,000 years B.P.). The soil at site C (Figs 11 and 12; Table 2) has a thin A horizon, Bk and K1 horizons, and a stage IV petrocalcic horizon. The soil lacks an argillic horizon and is in the Delnorte series, a Typic Petrocalcid, loamy-skeletal, mixed, superactive, thermic, shallow.

The K33 horizon is underlain by cemented high carbonate material that in places has reddish hues and a laminar horizon, suggesting a buried Bt horizon that is mostly carbonate-engulfed, and a discontinuous stage IV horizon. This material is thought to represent a buried Jornada I soil that was partly eroded before deposition of the overlying Jornada II alluvium. This material was not sampled.

The change from stage III carbonate at sites A and B to stage IV at site C in soils of the same age (Jornada II) illustrates one of the most profound evolutionary changes in soils. This evolutionary change, which also has a major effect on root morphology and distribution, is clearly caused by a marked increase in gravel content of the Jornada II soil. For the three Jornada II soils as a whole, the weighted average gravel content by volume at site A is 4%, at site B 32%, and at site C 63%. Conversely, the total amount of pedogenic carbonate in the soil with the stage IV horizon at site C (205 kg m^{-2}) is substantially less than that of the soils with stage III horizons at sites A and B (415 and 317 kg m^{-2}, respectively). So much of the soil at site C is occupied by gravel that much

Figure 11. Landscape and vegetation of the Delnorte soil, a Typic Petrocalcid in Jornada II alluvium at site C. Most of the shrubs are creosotebush and tarbush. Horizons above the stage IV petrocalcic horizon were removed during the root studies, and the upper part of the tape rests on the stage IV horizon. The San Andres Mountains are on the skyline.

less carbonate is required to cement the horizon than in soils at sites A and B, dominated by fine earth. In addition, some rock fragments are of cobble size.

This soil also illustrates the initial development of a stage IV laminar horizon and its effect on plant roots. Only a single laminar horizon has formed in nearly all of the trench exposure, an exception being in one place on the west end of the trench where a second laminar horizon, about 15 to 20 cm across and 5 to 10 cm thick, occurs at a depth of 20 cm. This second stage IV horizon rests on, but is not cemented to, the first laminar horizon, which occurs continuously beneath.

Adjacent to the trench, where horizons above the stage IV horizon were removed, the stage IV horizon is generally continuous except for four small openings where it has not yet formed (Fig. 12). Some roots occur only atop the stage IV horizon, which forms a dense barrier to roots. Others extend into the openings as will be discussed later.

Roots

Roots of two creosotebush plants were excavated at site C (Fig. 13). The plant on the right in Fig. 13 was 1·1 m tall and 1·6 m in diameter, and the plant on the left was 0·9 m tall and 0·8 m in diameter. There was a soil pedestal 5 cm tall under the larger plant and a pedestal 3 cm in height under the smaller plant. The root crown of the larger plant was 15 cm in diameter and 10 cm in length. There were 70 roots arising from the crown with diameters ranging from 0·7 to 22 mm and averaging 5·5 mm in diameter. In addition there were six roots arising from stem branches in contact with the soil. Although the crown and branches of the larger plant gave the appearance of

Figure 12. View of the landscape, soil and vegetation at site C after the shrubs and roots shown in Fig. 11 had been removed. The hammer is in one of the openings in the stage IV horizon, where the plugged and laminar horizons have not yet formed (see text for discussion). Roots extended into the opening. The Dona Ana Mountains are on the skyline.

a single individual, close examination revealed that the crown had divided into five segments supporting one to eight live stems. The root crown of the plant on the left in Fig. 13 was 10 × 15 cm and 5 cm long. There were 23 roots arising from the crown ranging from 1 to 19 mm in diameter with an average diameter of 5·7 mm. This root crown was composed of six distinct segments supporting one to four live stems. Crowns of other creosotebush plants at this site were found to be similarly segmented. Root crowns of the relatively young creosotebush plants at sites A and B could not be broken into segments. One possible explanation is that the plants at site C are very old and over time the once continuous cambium and vascular system of the root crown has degenerated and the decay of connective tissue has created a number of physiologically independent systems. A similar fragmentation into autonomous entities has been described for bean-caper (*Zygophyllum dumosum*) shrubs in the Negev (Evenari *et al.*, 1971). The fragmented and probably very old root crowns of creosotebush suggest that these plants and others at similar elevations may have provided seeds for establishment of downslope shrubs (such as those at site B that were not present as late as 1920, as previously discussed).

Most of the roots were found above the petrocalcic horizon and often they were growing in contact with the laminar layer capping the petrocalcic horizon. Several roots were traced into the petrocalcic horizon for a few centimeters but it was extremely time-consuming to follow roots in this material so none were traced individually through the petrocalcic horizon. However, examination of the walls of the 1·5-m deep access trench revealed a fairly large number of roots which had the coloration of creosotebush roots at 1·5 m depth. Diameter of these roots ranged from 0·2 to 1·4 mm. Cobbles (10–20 cm diameter) found below the petrocalcic horizon often had a mat of very fine roots on their surfaces.

Roots of a tarbush plant 1·1 m tall and 1·0 m in diameter growing on a 2 cm soil pedestal were also excavated at site C (Fig. 14). The large taproot tapered from a diameter of 54 mm at 3 cm depth to 34 mm at 17 cm depth where it was deflected by a cobble and divided into two 17-mm diameter roots. An 8-mm and 10-mm diameter first order branch arose at 7 and 7·5 cm depths, respectively. A 10-mm diameter root at 12 cm depth and two 13-mm diameter roots at 15 cm depth comprised the remaining first order branches. All of the above roots branched extensively and reached a horizontal extension > 2 m. Some roots angled upward to within 5 cm of the

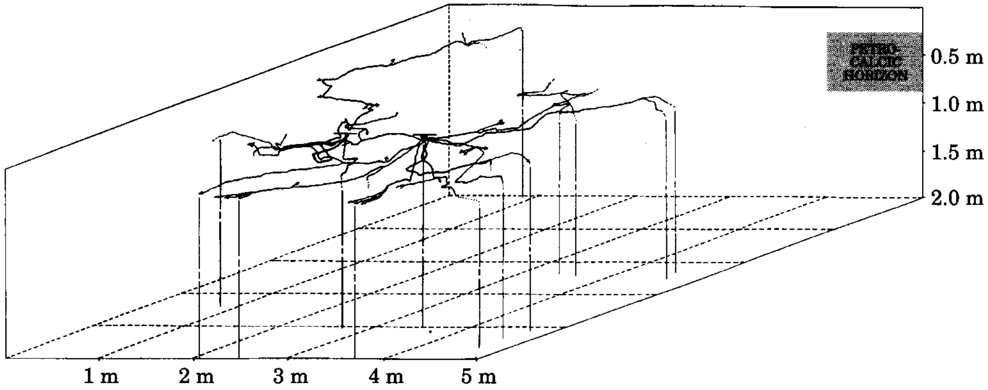

Figure 13. Root systems of two creosotebush plants growing in the Typic Petrocalcid Delnorte at site C. The horizontal line at the top of the root crown denotes the soil surface. Roots ending in arrows were not followed further, roots ending in dashes were dead beyond that point, and roots ending in dots penetrated into the petrocalcic horizon. The position of the petrocalcic horizon is shown on the back plane of the figure. The dot on the base plane shows the position of the tarbush plant shown in Fig. 14. Roots penetrated to at least 1·5 m depth. Depth is shown to 2 m merely to avoid overlapping of lines.

soil surface. Like creosotebush roots, most of the tarbush roots were above the petrocalcic horizon but were traced into the petrocalcic horizon at several points (Fig. 14). Roots from 0·2 to 2·4 mm diameter with the coloration of tarbush roots were found on the walls of the access trench below the petrocalcic horizon. The roots of tarbush and creosotebush were highly intermingled, even at the bases of the respective plants.

Discussion

The process of carbonate plugging (late stage III) and laminar horizon formation (stage IV) was first presented for soils of the valley border (Gile *et al.*, 1966), where the prominent effect of particle size on carbonate morphology was also illustrated. In that study it was shown that stage IV first formed in gravelly soils of the late Pleistocene Picacho surface. As shown by sites A–C of this study, development of stage IV only in gravelly Jornada II soils is strong evidence that the Jornada II surface is the fan piedmont chronological analog of the valley border Picacho surface, both being of late Pleistocene age as previously proposed (Gile *et al.*, 1981).

The evolutionary change from stage III to stage IV and its relation to gravel content also has a major effect on the movement of soil water and hydraulic conductivity, which in turn strongly influence root morphology and distribution. In horizons with abundant gravel, pebbles control the path of water movement, carbonate accumulation and root distribution. As carbonate continues to accumulate in the horizon, carbonate coatings on pebbles thicken and form scattered zones of pebbles cemented together, separated by non-cemented parts. The cemented parts represent zones of restricted hydraulic conductivity, funneling soil water to uncemented parts of the horizon, and eventually forming the plugged and laminar horizons. Site C illustrates both substantial areas of the stage IV horizon that forms a barrier to roots, and four small openings where the stage IV horizon has not yet formed. Such openings are thought to represent a final or near-final group of funnels into which soil water and

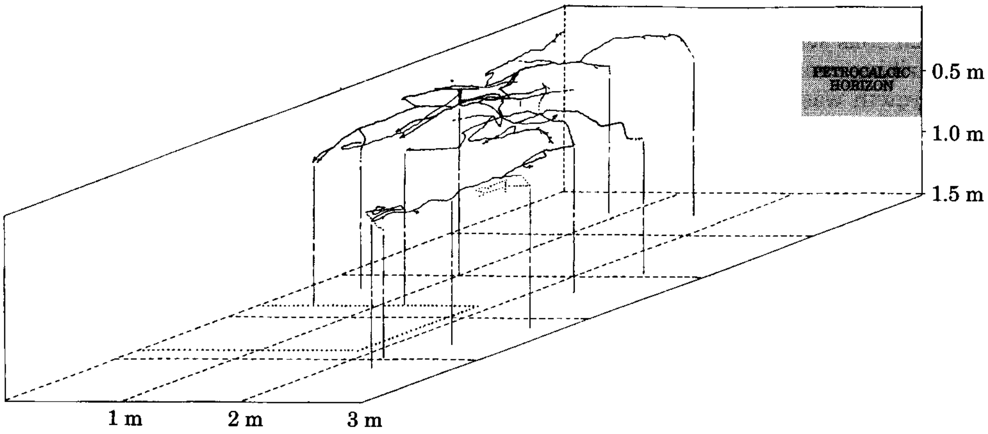

Figure 14. Roots of a tarbush plant growing in the Typic Petrocalcid Delnorte at site C. The horizontal line at the top of the root crown denotes the soil surface. Roots ending in arrows were not followed further, roots ending in dashes were dead beyond that point, and roots ending in dots penetrated into the petrocalcic horizon. The position of the petrocalcic horizon is shown on the back plane of the figure. The solid circle on the surface plane shows the position of the creosotebush plant on the right in Fig. 13.

roots currently extend, prior to formation of the continuous plugged and laminar horizons that constitute the stage IV horizon.

The process of carbonate plugging and laminar horizon formation takes much longer in soils with less gravel, because carbonate nodules and masses must first form and become cemented, to serve the carbonate-plugging function of pebbles in the materials with abundant gravel. In non-gravelly materials of this area, stage IV horizons have formed only in soils of La Mesa surface, in the basin floor (middle to early Pleistocene).

A high percentage of gravel also has a depressing effect on the formation of pipes with Bt horizons. This is because of the strong control that gravel exerts on water movement in soils, and because of the relatively rapid accumulation of carbonate in materials with abundant gravel. The uncemented, funnel-like openings in the stage IV horizon at site C, and their precursors during formation of the stage IV horizon, may be considered as analogs of pipes in less gravelly materials, in that both kinds tend to concentrate soil water. But in contrast to pipes in less gravelly materials, which may begin their development in a variety of ways (see Gile & Grossman, 1979, pp. 185–187 for a discussion of the origin of pipes), in materials with abundant gravel the process of pipe formation appears to be controlled by the disposition of gravel itself.

As in previous soil–root studies (Gile *et al.*, 1995, 1997), this study illustrates an example of deep penetration of roots and soil water — to at least 5 m depth at site A. These deep penetrations were attributed to occasional very deep wettings in isolated zones of preferential water movement — present and former root channels; existing roots; pipes in various stages of development; animal burrows; krotovinas (the fillings of tunnels made by rodents; Soil Survey Division Staff, 1993); and cracks that form when the soil dries (Gile *et al.*, 1995). In a study of ground-water recharge, Stephens (1994) noted other means of deep moisture penetration such as fissures, fractures, joints, faults, and sedimentary contacts. Martinez-Meza & Whitford (1996) found that root channels are preferential pathways for movement of stemflow water into the soil, and that this water is a potential source of soil water that allows shrubs to remain physiologically active under drought conditions.

Although not a part of the present study, some soils in the soil water exclosures cited previously illustrate still another way for the deep penetration of water in arid land soils. As the soils become more clayey basinward, some soils form a microrelief of small depressions and holes that transmit water deep into the soil (for a discussion and data for such soils see Herbel *et al.*, 1994).

A striking example of differences in hydraulic conductivity and their importance to root growth was provided by the krotovina discussed in an earlier report (Gile *et al.*, 1997). Roots were common in the krotovina but sparse in the surrounding soil in which hydraulic conductivity was restricted.

At all of the sites examined in this study, the roots of neighboring creosotebushes were highly intermingled. Chew & Chew (1965) excavated 17 non-contiguous root systems of creosotebush in Arizona and found ‘some overlap.’ Cannon (1911) found a high degree of overlap of creosotebush roots on a desert bajada but none in a flood plain situation. At a site only a few kilometers from our studies, Brisson & Reynolds (1994) excavated 32 small (less than 1 m tall) creosotebush plants in a 4 × 5 m plot with upper horizons underlain by a petrocalcic horizon and found very little overlap of root systems. However, they did not map roots below 2 mm in diameter. Singh (1964) also shows little overlap of 16 contiguous creosotebush plants in the northern Chihuahuan Desert but there is no indication of the minimal diameter mapped. The latter two studies are interesting but should not be construed as being representative of all creosotebush communities. When comparing root systems and competitive interactions of neighboring plants, small as well as large roots must be considered. We traced creosotebush roots with diameters of 2 mm or less for distances of 1 m or more at all of our study sites. Because overlap of root systems indicates potential competitive interactions (Caldwell, 1987), we believe it is safe to assume that there is a high degree of inter- and intraspecific competition for the limited soil water supplies at the shrub-dominated sites we examined.

We thank Bob Ahrens, Reldon Beck, Jeff Herrick, Curtis Monger and Walt Whitford for their helpful reviews. Thanks also go to Yvonne Flores for typing the manuscript.

References

Antevs, E. (1955). Geologic-climatic dating in the West. *American Antiquity*, **20**: 317–335.

Brisson, J. & Reynolds, J.F. (1994). The effect of neighbors on root distribution in a creosotebush (*Larrea tridentata*) population. *Ecology*, **75**: 1693–1702.

Buffington, L.C. & Herbel, C.H. (1965). Vegetational changes on a semidesert grassland range. *Ecological Monographs*, **35**: 139–164.

Caldwell, M.M. (1987). Competition between root systems in natural communities. In: Gregory, P.J., Lake, J.V. & Rose, D.A. (Eds), *Root Development and Function*, pp. 167–185. Cambridge, U.K.: Cambridge University Press. 206 pp.

Caldwell, M.M. & Richards, J.H. (1986). Competing root systems: morphology and models of absorption. In: Givnesh, T.J. (Ed.), *On the Economy of Plant Form and Function*, pp. 251–273. Cambridge, U.K.: Cambridge University Press. 717 pp.

Cannon, W.A. (1911). *The Root Habits of Desert Plans*. Publication No. 131. Washington, DC: Carnegie Institution of Washington. 96 pp.

Chew, R.M. & Chew, A.E. (1965). The primary productivity of a desert shrub (*Larrea tridentata*) community. *Ecological Monographs*, **35**: 355–375.

Evenari, M., Shanan, L. & Tadmor, N. (1971). *The Negev: the challenge of a desert*. Cambridge, MA: Harvard University Press. 345 pp.

Gardner, J.L. (1951). Vegetation of the creosotebush area of the Rio Grande Valley in New Mexico. *Ecological Monographs*, **21**: 379–403.

Gile, L.H. & Grossman, R.B. (1979). *The Desert Project Soil Monograph*. Document PB80–135304. Springfield, VA: National Technical Information Service. 984 pp.

Gile, L.H., Peterson, F.F. & Grossman, R.B. (1966). Morphological and genetic sequences of carbonate accumulation in desert soils. *Soil Science*, **101**: 347–360.

Gile, L.H., Hawley, J.W. & Grossman, R.B. (1981). *Soils and Geomorphology in the Basin and Range Area of Southern New Mexico — Guidebook to the Desert Project*. Memoir 39. Socorro, NM: New Mexico Bureau of Mines and Mineral Resources. 222 pp.

Gile, L.H., Gibbens, R.P. & Lenz, J.M. (1995). Soils and sediments associated with remarkable, deeply penetrating roots of crucifixion thorn (*Koeberlinia spinosa* Zucc.). *Journal of Arid Environments*, **31**: 137–151.

Gile, L.H., Gibbens, R.P. & Lenz, J.M. (1997). The near-ubiquitous pedogenic world of mesquite roots in an arid basin floor. *Journal of Arid Environments*, **35**: 39–58.

Hallmark, C.T. & Allen, B.L. (1975). The distribution of creosotebush in West Texas and eastern New Mexico as affected by selected soil properties. *Soil Science Society of America Proceedings*, **39**: 120–124.

Hawley, J.W. & Kottlowski, F.E. (1969). Quaternary geology of the South-Central New Mexico border region. In: Kottlowski, F.E. & LeMone, D.V. (Eds), *Border Stratigraphy Symposium*, pp. 89–115. Circular 104. Socorro, NM: New Mexico Bureau of Mines and Mineral Resources.

Herbel, C.H., Gile, L.H., Frederickson, E.L. & Gibbens, R.P. (1994). Soil water and soils at soil water sites, Jornada Experimental Range. In: Gile, L.H. & Ahrens, R.J. (Eds), *Supplement to the Desert Project Soil Monograph, Volume I*, pp. 445–532. Soil Survey Investigations Report 44. Lincoln, NE: USDA-SCS. 592 pp.

Herwitz, S.R. & Olsvig-Whittaker, L. (1989). Preferential upslope growth of *Zygophyllum dumosum* Boiss. (Zygophyllaceae) roots into bedrock fissures in the northern Negev desert. *Journal of Biogeography*, **16**: 457–460.

Jackson, R.B., Canadell, J., Ehleringer, J.R., Mooney, H.A., Sala, O.E. & Schulze, E.D. (1996). A global analysis of root distributions for terrestrial biomes. *Oecologia*, **108**: 389–411.

Machette, M.N. (1985). Calcic soils of the southwestern United States. In: Weide, D.L. (Ed.), *Soils and Quaternary Geology of the Southwestern United States*, pp. 1–21. Boulder, CO: Geological Society of America Special Paper 203. 150 pp.

Marion, M.G. (1989). Correlation between long-term pedogenic $CaCO_3$ formation rate and modern precipitation in deserts of the American Southwest. *Quaternary Research*, **32**: 291–295.

Martinez-Meza, E. & Whitford, W.G. (1996). Stemflow, throughfall and channelization of stemflow by roots in three Chihuahuan desert shrubs. *Journal of Arid Environments*, **32**: 271–287.

Mayer, L., McFadden, L.D. & Harden, J.W. (1988). Distribution of calcium carbonate in desert soils. A model. *Geology*, **16**: 303–306.

Ruhe, R.V. (1967). *Geomorphic Surfaces and Surficial Deposits in Southern New Mexico.* Memoir 18. Socorro, NM: New Mexico Bureau of Mines and Mineral Resources. 66 pp.

Rundel, P.W. & Nobel, P.S. (1991). Structure and function in desert root systems. In: Atkinson, D. (Ed.), *Plant Root Growth: an ecological perspective*, pp. 349–378. London: Blackwell Scientific Publishers. 478 pp.

Schlesinger, W.H. (1991). *Biogeochemistry: an analysis of global change.* San Diego, CA: Academic Press. 443 pp.

Singh, S.P. (1964). Cover, biomass, and root–shoot habit of *Larrea divaricata* on a selected site in southern New Mexico. M.S. thesis. New Mexico State University, Las Cruces. 36 pp.

Soil Survey Division Staff (1993). *Soil Survey Manual.* USDA Handbook 19 (Revised). Washington, DC: USDA. 437 pp.

Soil Survey Investigations Staff (1996). *Soil Survey Laboratory Methods Manual.* Soil Survey Investigations Report No. 42. Lincoln, NE. 603 pp.

Soil Survey Staff (1951). *Soil Survey Manual.* USDA Handbook 18. Washington, DC: U.S. Government Printing Office. 503 pp.

Soil Survey Staff (1996). *Keys to Soil Taxonomy* (7th Edn). Washington, DC: USDA-NRCS. 644 pp.

Spaulding, W.G. & Graumlich, L.J. (1986). The last pluvial climatic episodes in the desert of southwestern North America. *Nature*, **320**: 441–444.

Stephens, D.B. (1994). A perspective on diffuse natural recharge mechanisms in areas of low precipitation. *Soil Science Society of America Journal*, **58**: 40–48.

Tatarko, J. (1980). Effect of calcium carbonate on the distribution of creosotebush (*Larrea tridentata* (DC.) Coville) in west Texas and southern New Mexico. M.S. thesis, Texas Tech University, Lubbock, TX. 110 pp.

York, J.C. & Dick-Peddie, W.A. (1969). Vegetation changes in southern New Mexico during the past hundred years. In: McGinnies, W.G. & Goldman, B.J. (Eds), *Arid Lands in Perspective*, pp. 155–166. Tucson, AZ: University of Arizona Press. 421 pp.